rond

multifit socket
installation instruction

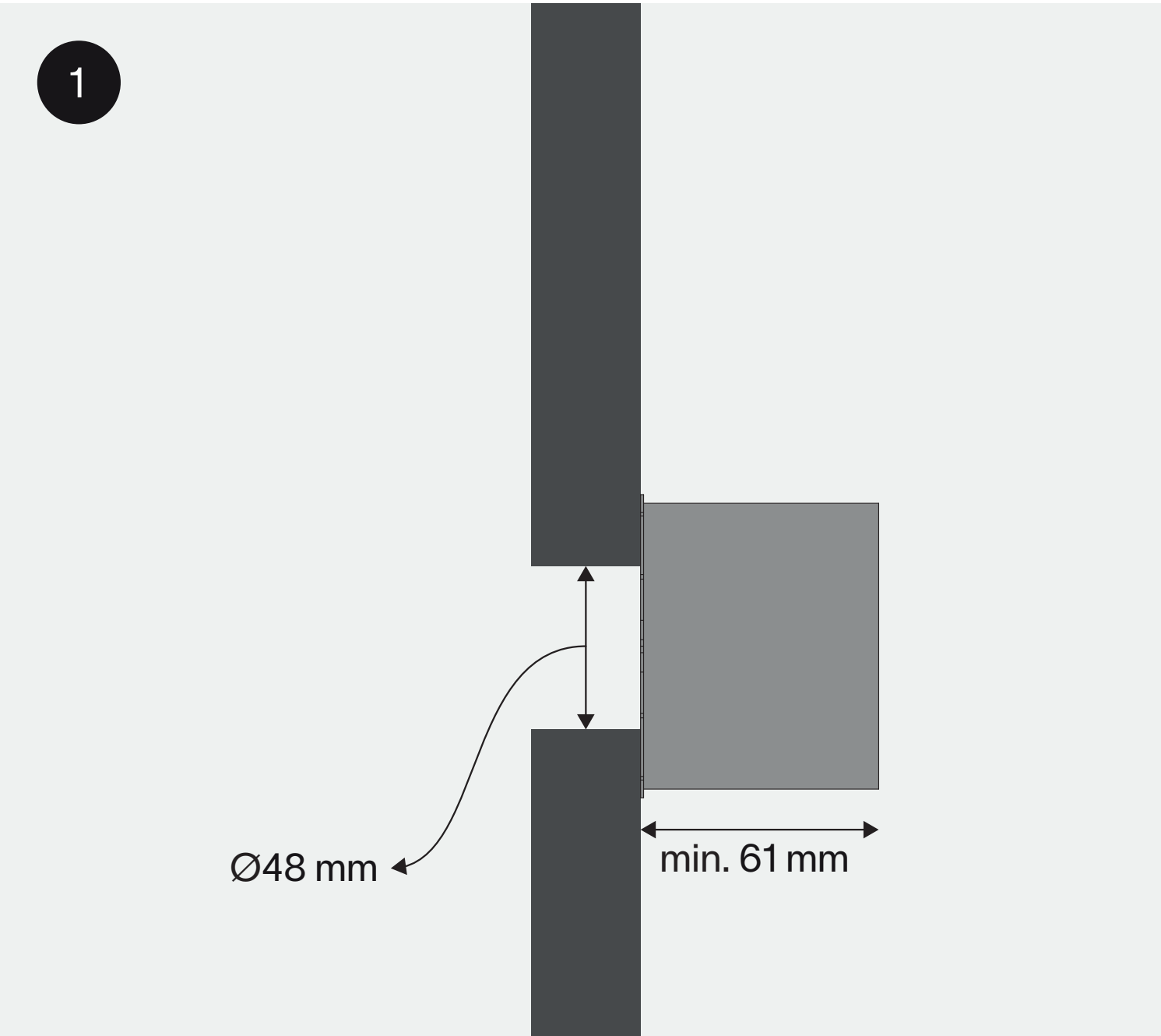

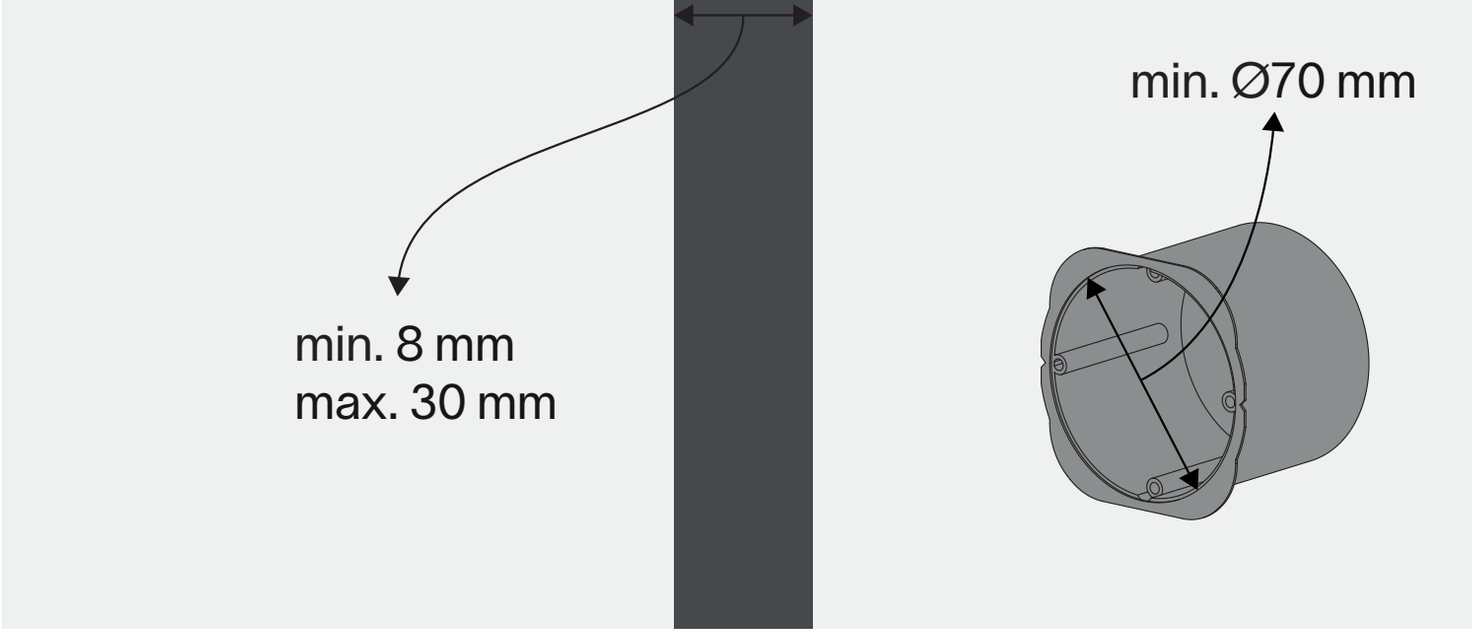

optional flush mount countersink

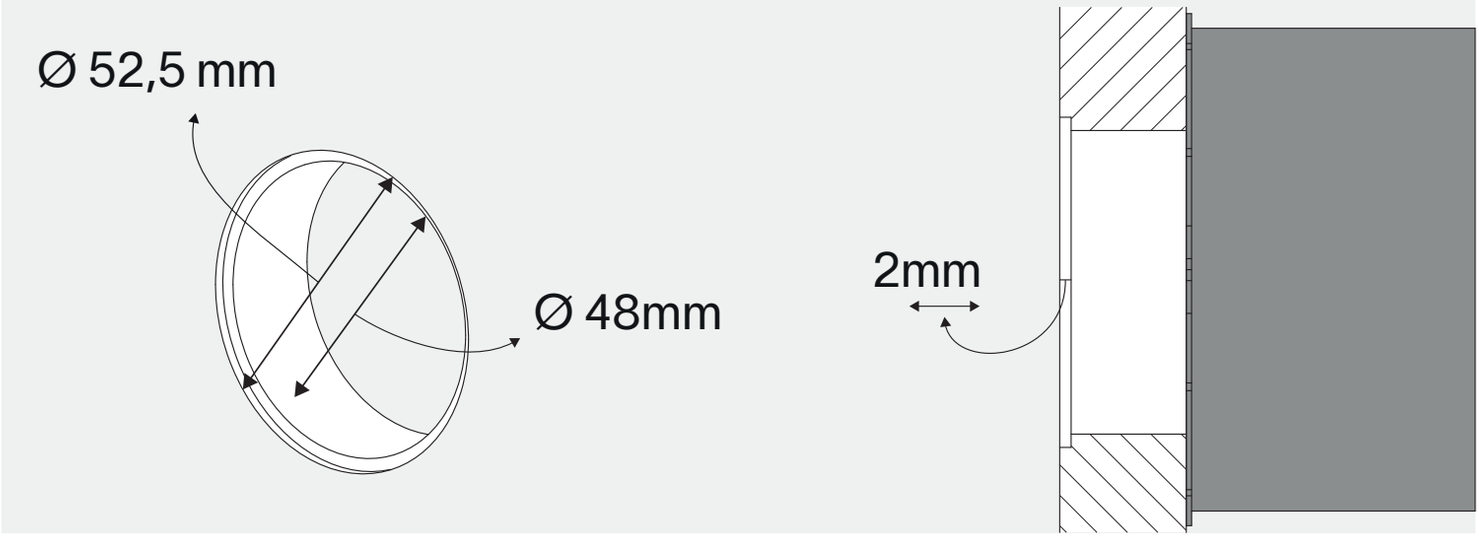

2

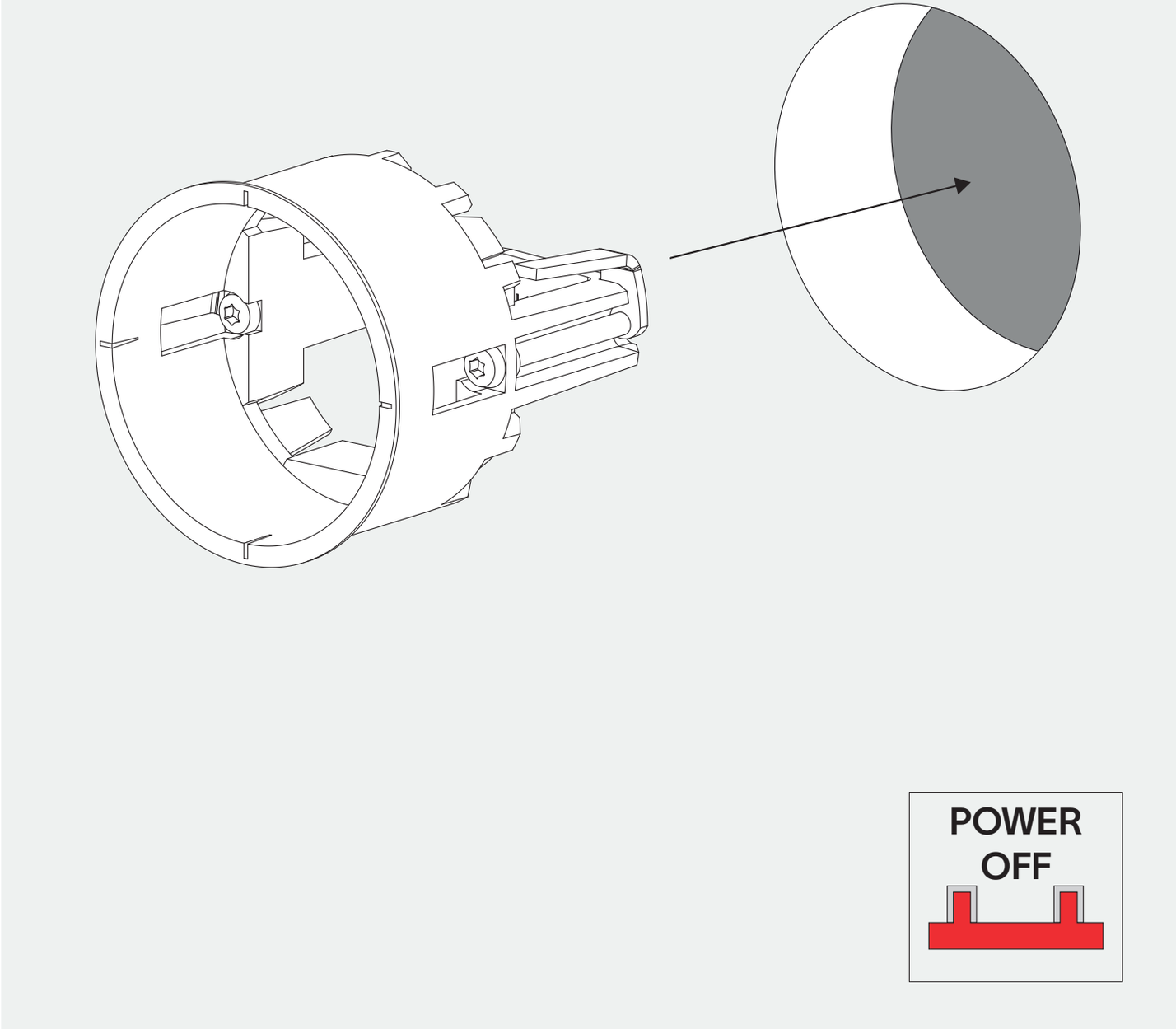

3

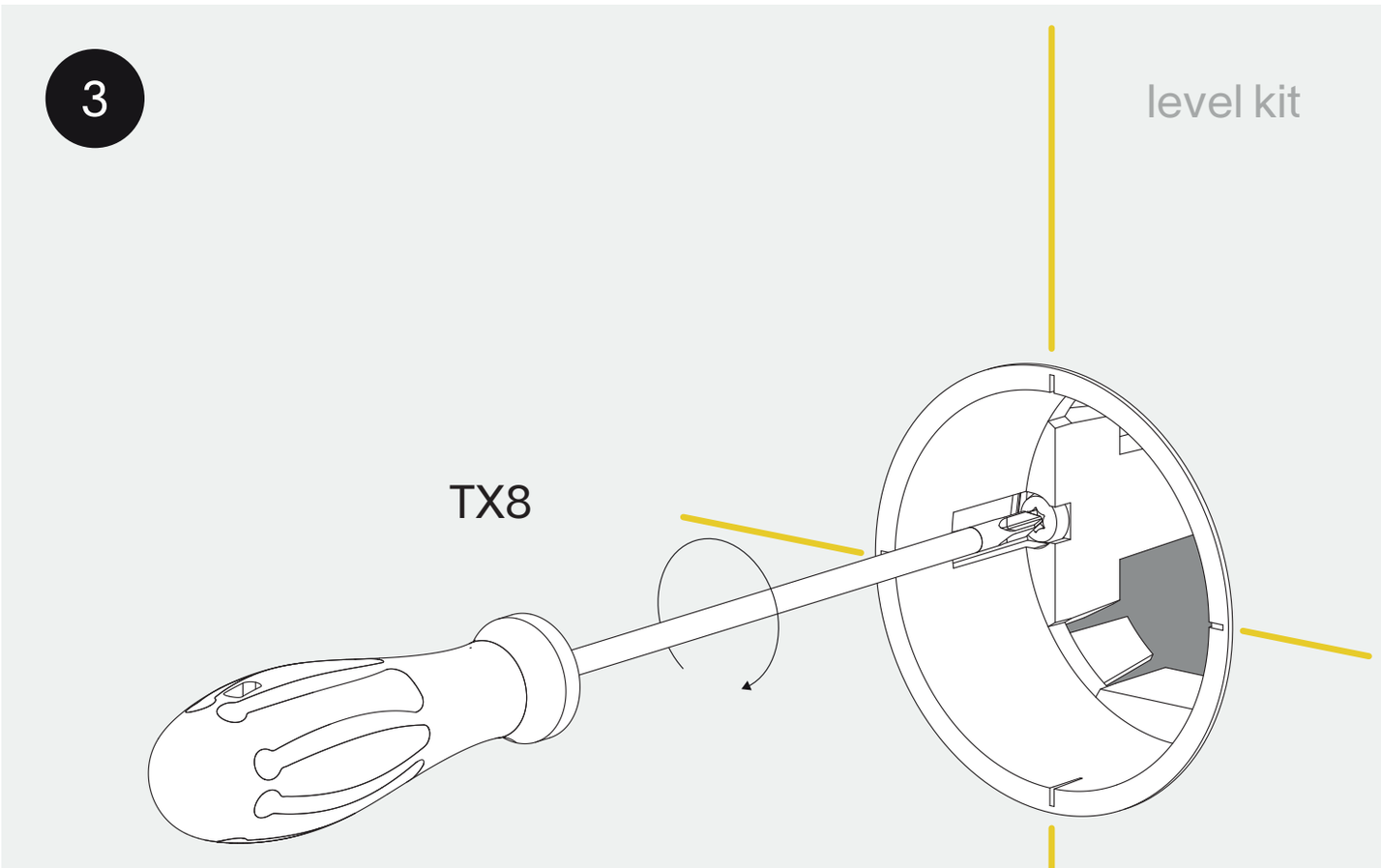

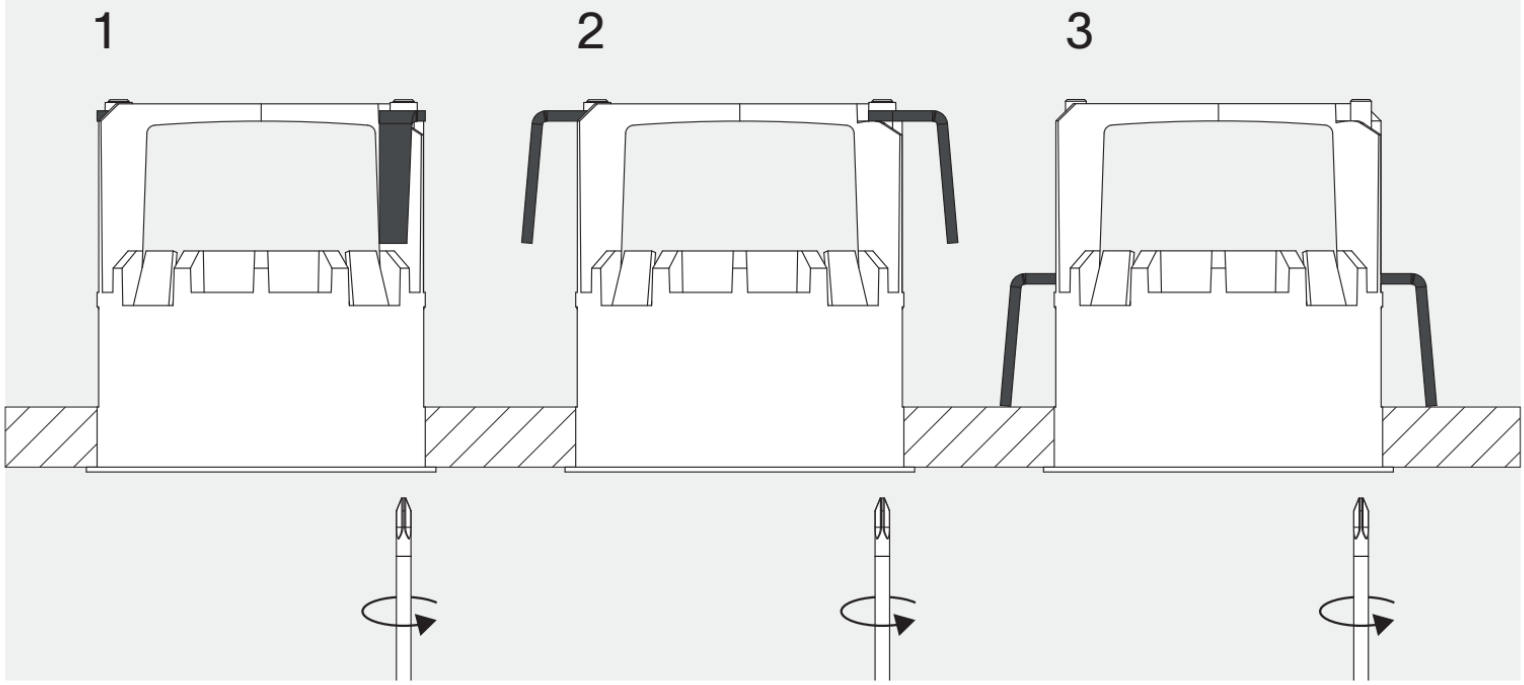

4

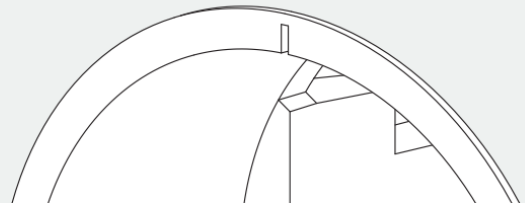

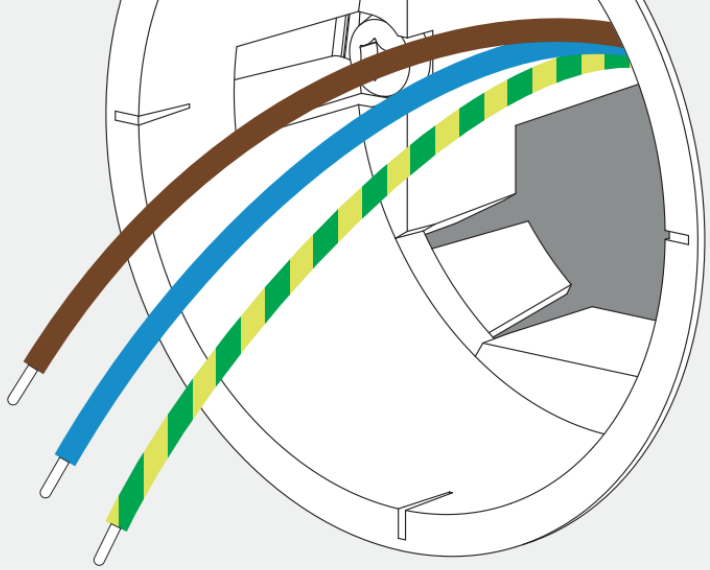

5

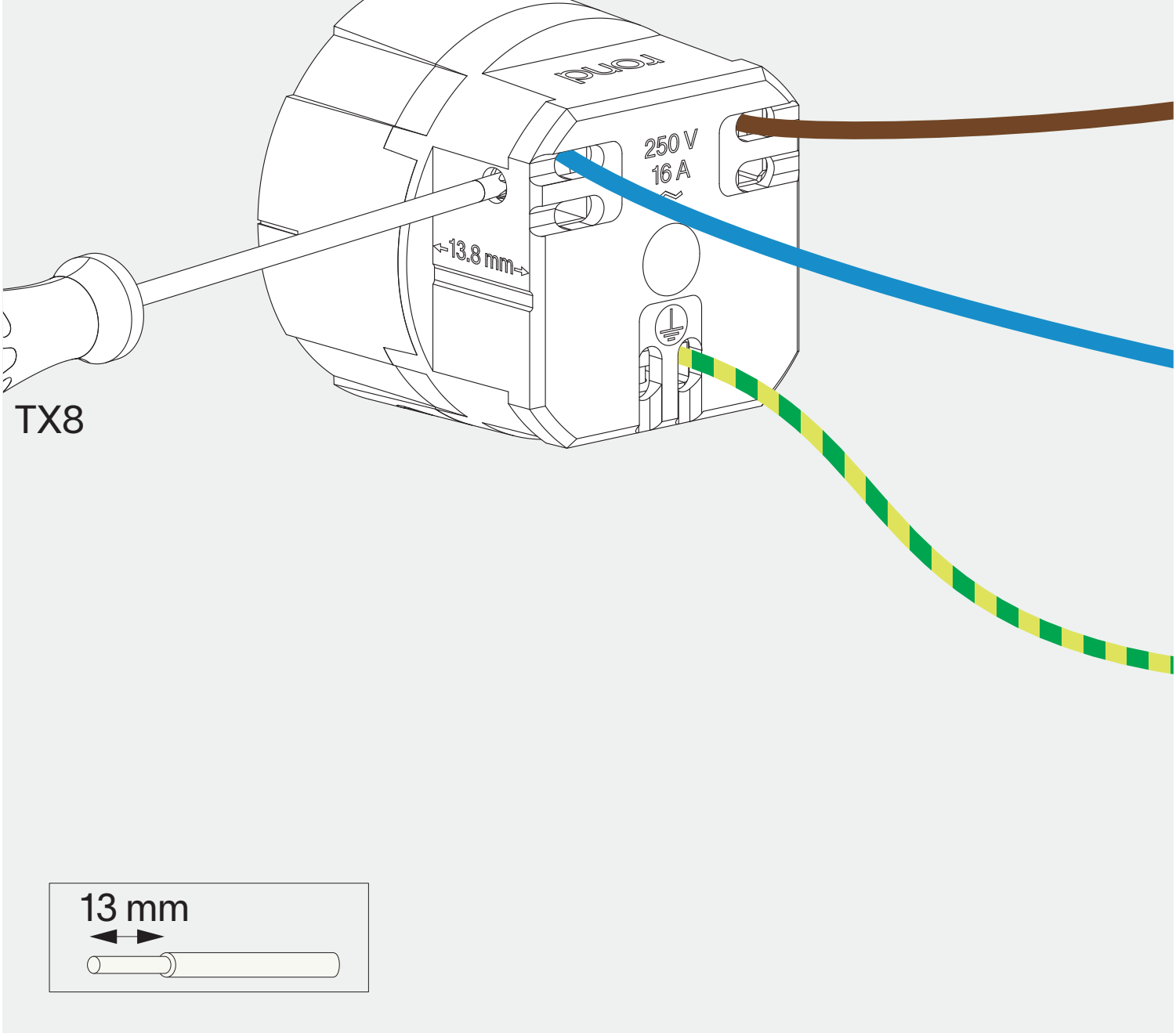

6

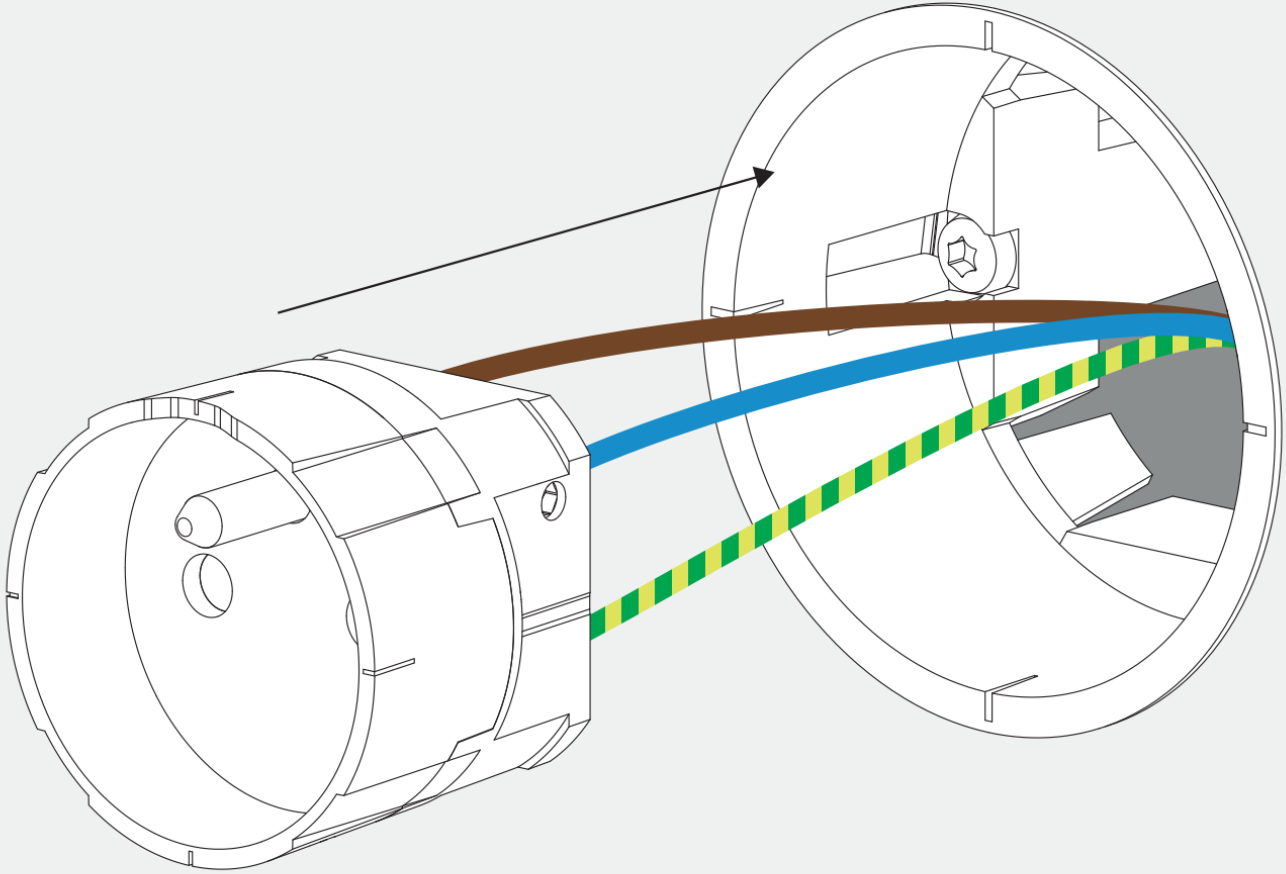

7

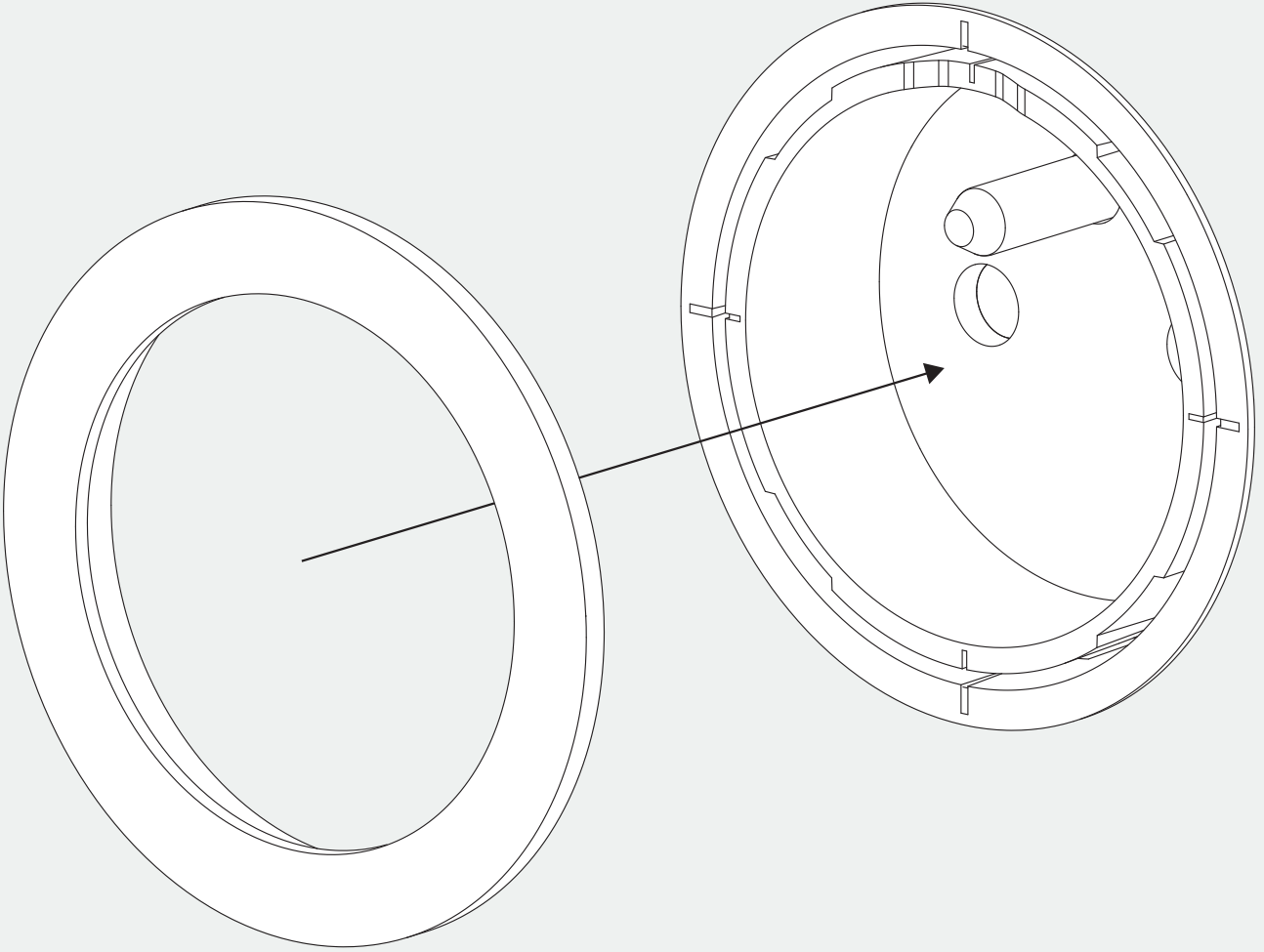

8

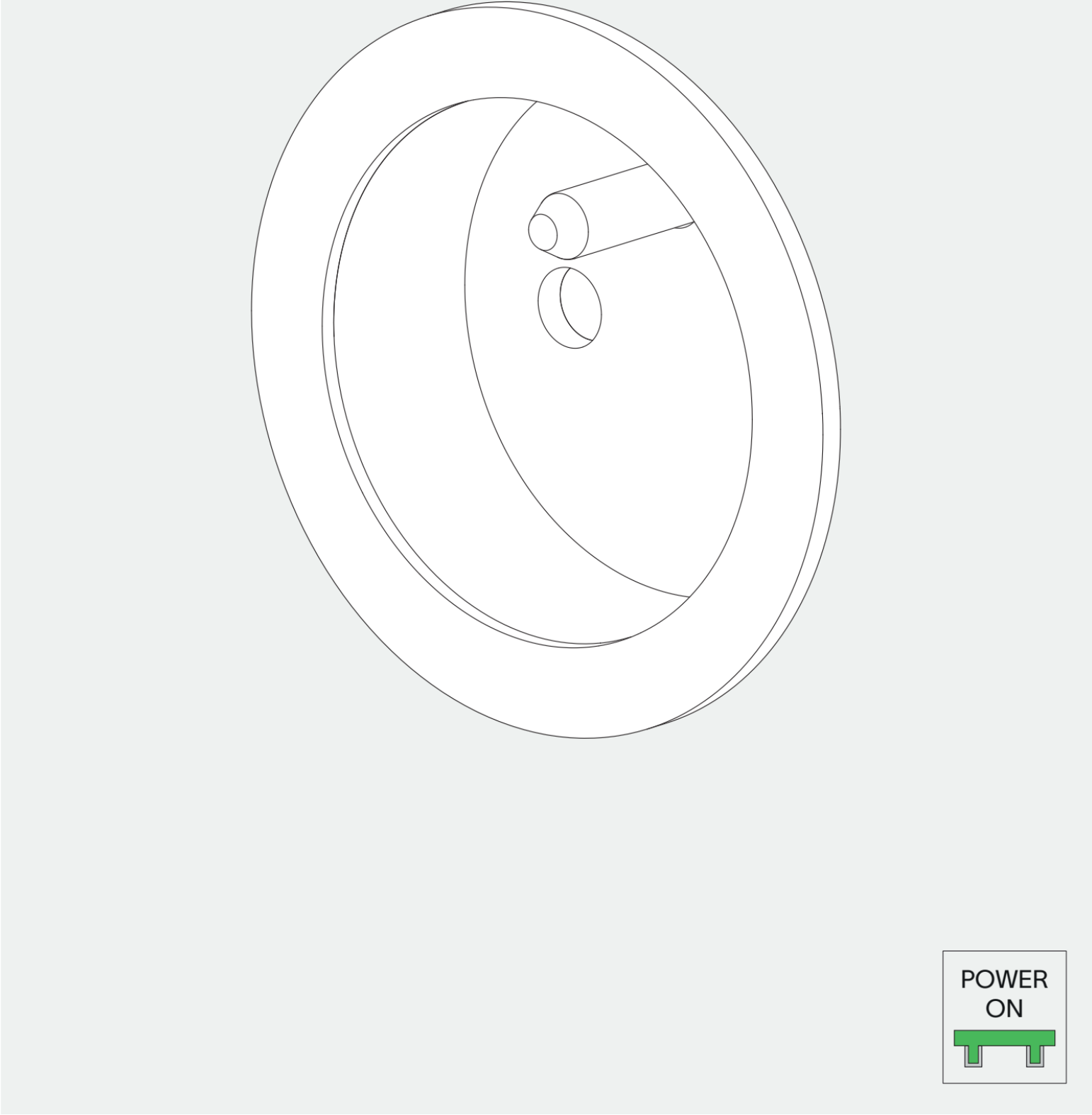

for removal

1

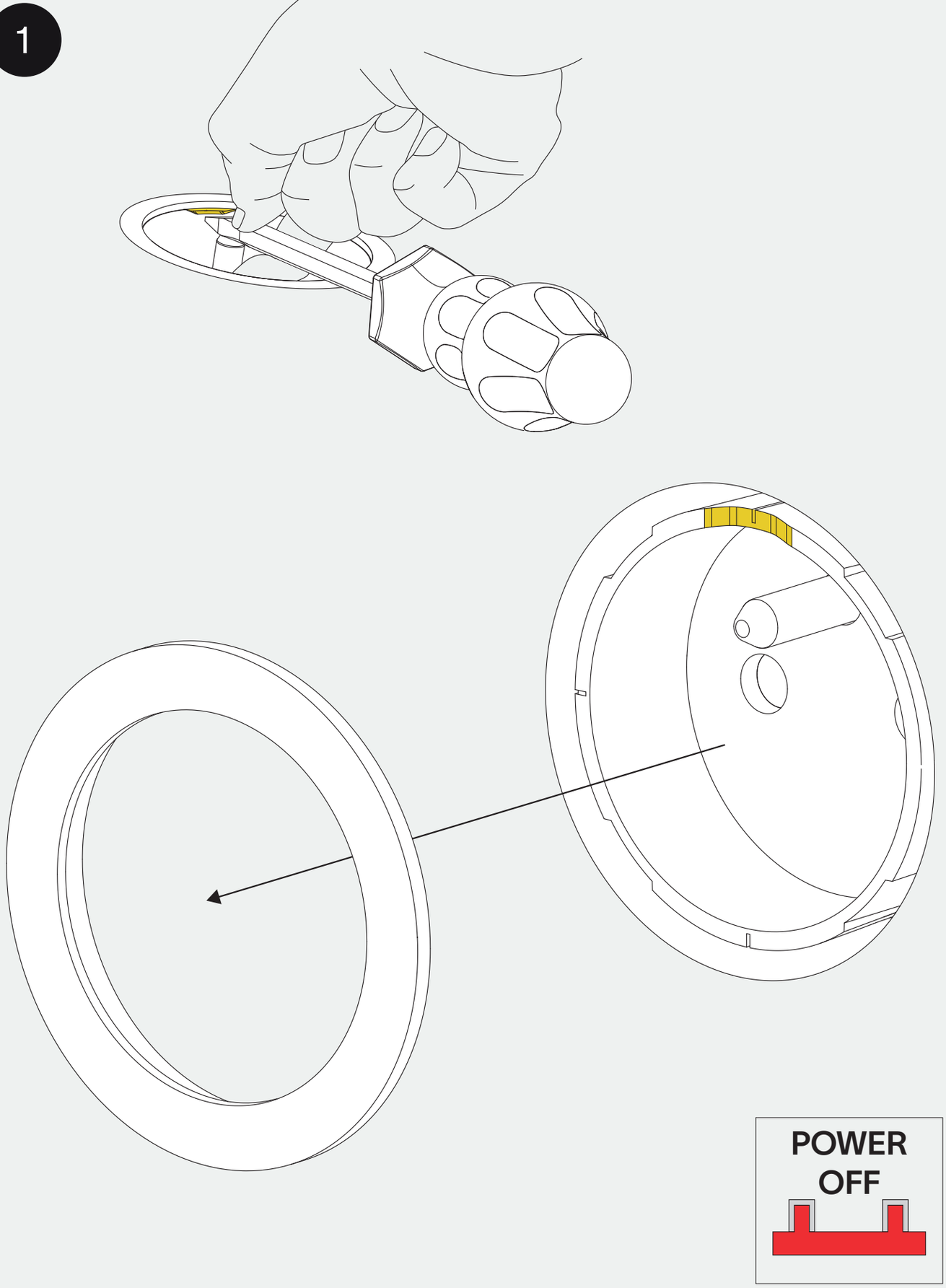

2

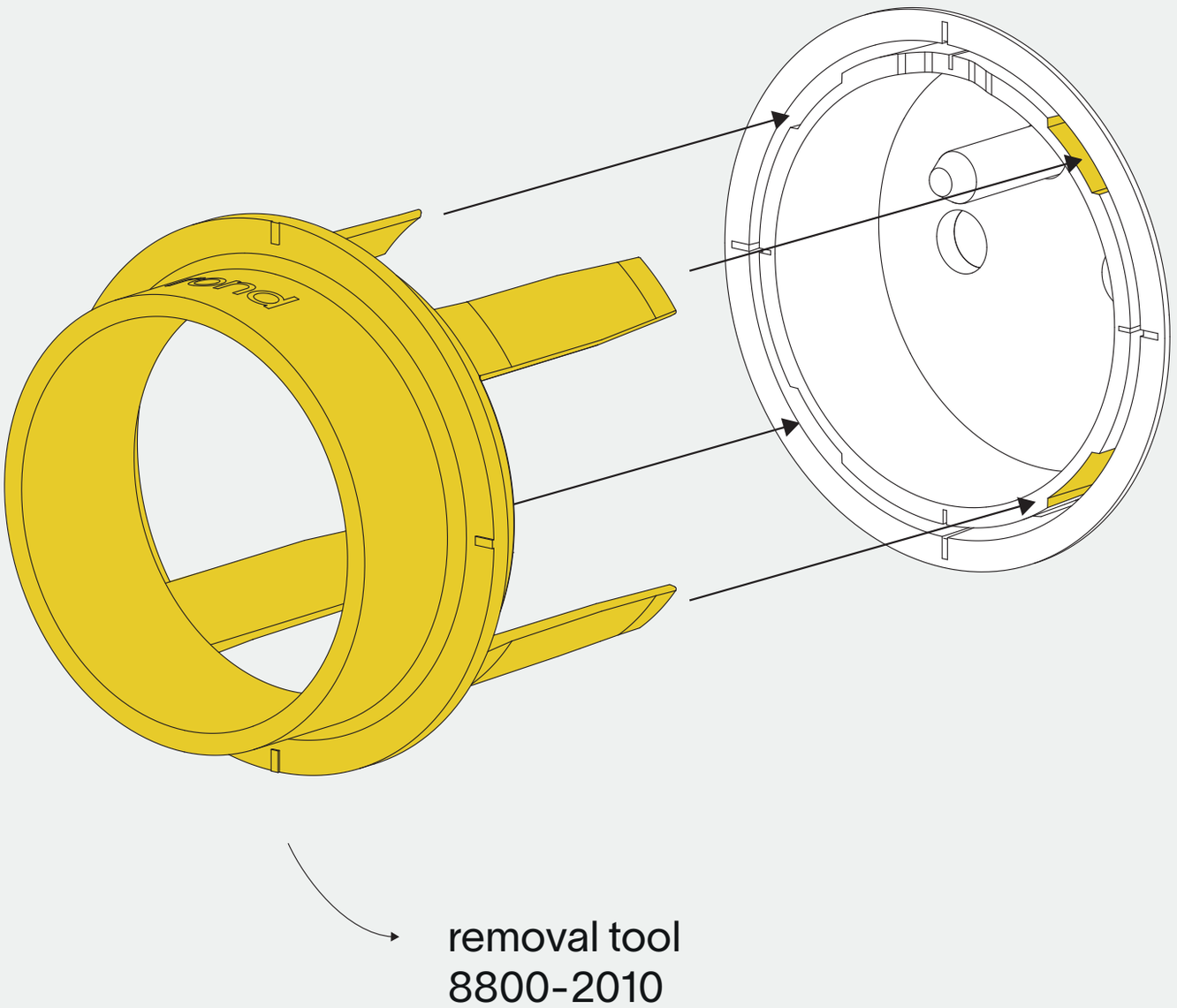

3

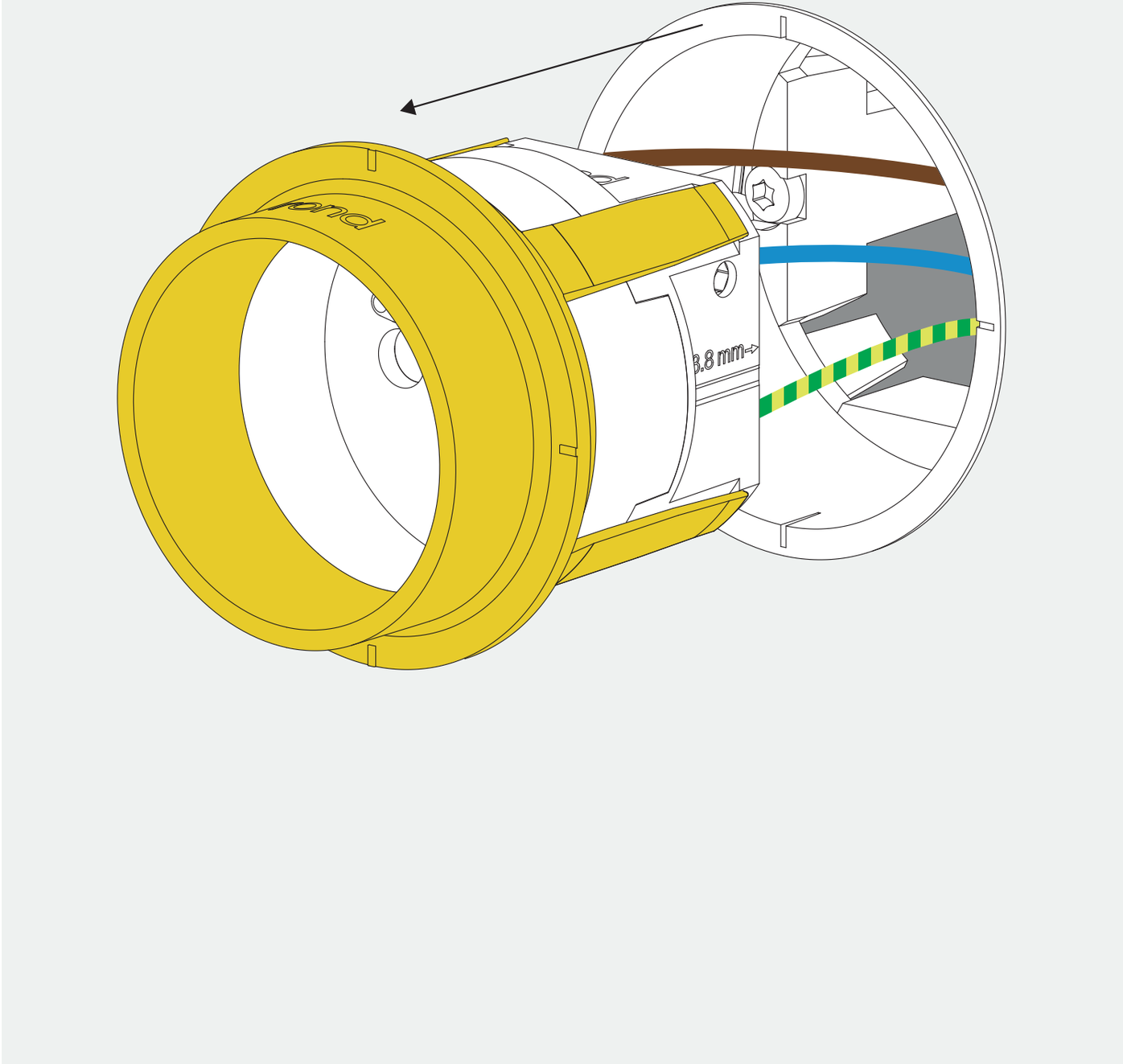

thank you for choosing rond

16/250	∿	CE	

rond.io

Shiver nv - Handelsstraat 19 - 8630 Veurne - Belgium

Installation must be done by skilled professionals only and instructions must be followed at all times. Warranty will not apply in case of wrongful use of if unskilled personnel attempts to repair a product.